AFAB Snap-On Coping +

Snap-On Coping w/ Intermittent Clips
Multi-System Compliant

Product must be installed using fasteners into each pre-punched hole to ensure testing compliance.

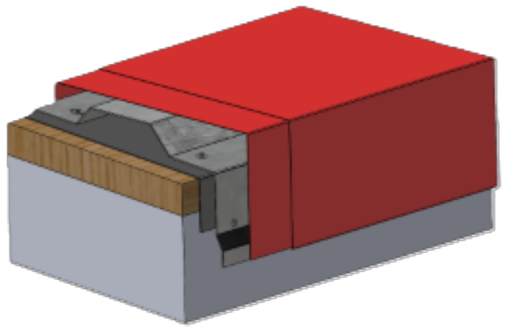

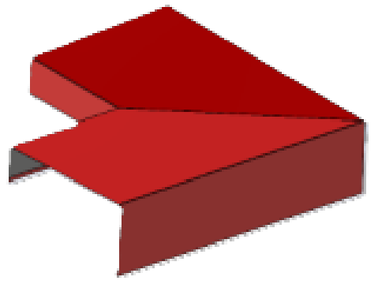

Outside Miter

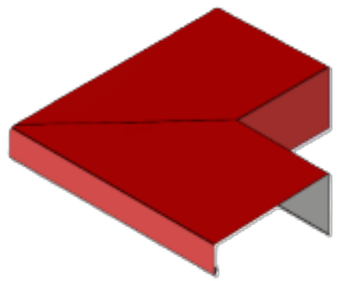

Inside Miter

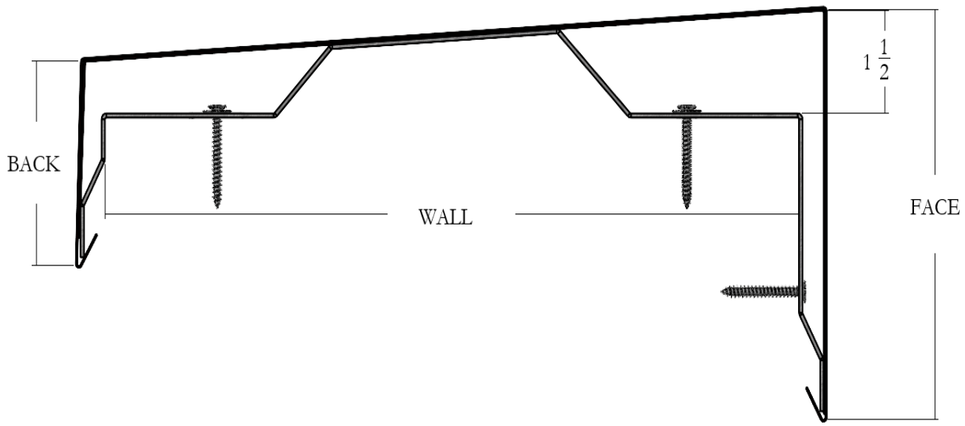

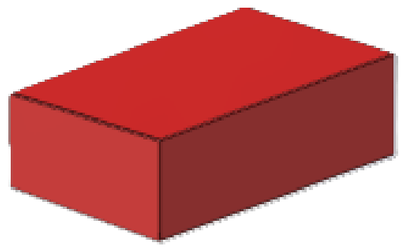

End CAP
(Left Shown)

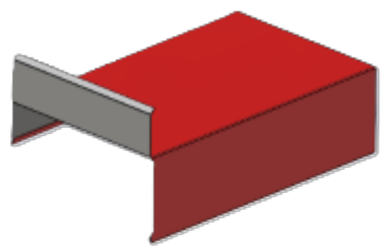

End Wall
(Left Shown)

Product Notes

Snap-On Coping system composed of a Factory Fabricated 16 Ga Clips @ 40" On Center, Joint Splice, and a Snap-On Cover in 10'-0" lengths. Please attach additional information for special angles of miters or roof plan details along with any Pictures needed.
Product should be installed in accordance with Installation Instructions to ensure compliance to testing requirements.
ANSI/SPRI/FM4435/ES-1 Test Pressures up to 227psf.

Back Size

Select a Size

Wall Size

Select a Size

Face Size

Select a Size

Material

Select Material

Color

Select a Color

Quantities

- Lineal Footage
- Outside Miters
- Inside Miters
- Right End Caps
- Left End Caps
- Right End Walls
- Left End Walls

Welded — Accessory Type

Approvals

ANSI/SPRI/FM4435/ES-1 TESTED
(MAX PRESSURE LISTED IN NOTES)

FM APPROVED

Project Information

Project Name:

Project Contact name, Email, Phone:

Project Address:

Project Type:

Select Type

Order Information

Customer Name:

Customer Address, Email & Phone:

Customer Purchase Order #:

Delivery Instructions / Date Needed:

Customer Approval:

Date Completed:

Submit To:
QUOTES@APPLIEDFABRICATORS.COM

Applied Fabricators
7185 200N
Greenfield, IN 46140
317-284-0685

Rev: 0
Drn by: KP
Date: 2-5-26
Sheet 1 of 1